THE AMERICAN SOCIETY OF MECHANICAL ENGINEERS
345 E. 47th St., New York, N.Y. 10017

96-GT-187

The Society shall not be responsible for statements or opinions advanced in papers or discussion at meetings of the Society or of its Divisions or Sections, or printed in its publications. Discussion is printed only if the paper is published in an ASME Journal. Authorization to photocopy material for internal or personal use under circumstance not falling within the fair use provisions of the Copyright Act is granted by ASME to libraries and other users registered with the Copyright Clearance Center (CCC) Transactional Reporting Service provided that the base fee of $0.30 per page is paid directly to the CCC, 27 Congress Street, Salem MA 01970. Requests for special permission or bulk reproduction should be addressed to the ASME Technical Publishing Department.

Copyright © 1996 by ASME All Rights Reserved Printed in U.S.A.

EFFECTS OF GEOMETRY ON SLOT–JET FILM COOLING PERFORMANCE

Daniel G. Hyams, Kevin T. McGovern, and James H. Leylek
Department of Mechanical Engineering
Clemson University
Clemson, SC

BREAK

ABSTRACT

The physics of the film cooling process for shaped, inclined slot–jets with realistic slot–length–to–width ratios (L/s) is studied for a range of blowing ratio (M) and density ratio (DR) parameters typical of gas turbine operations. The effect of inlet and exit shaping of the slot–jet on both flow and thermal field characteristics is isolated, and the dominant mechanisms responsible for differences in these characteristics are documented. A previously documented computational methodology was applied for the study of four distinct configurations: (1) slot with straight edges and sharp corners (reference case); (2) slot with shaped inlet region; (3) slot with shaped exit region; and (4) slot with both shaped inlet and exit regions. Detailed field results as well as surface phenomena involving adiabatic film effectiveness (η) and heat transfer coefficient (h) are presented. It is demonstrated that both η and h results are vital in the proper assessment of film cooling performance. The key parameters M and DR were varied from 1.0 to 2.0 and 1.5 to 2.0, respectively, to show their influence. Simulations were repeated for slot length–to–width ratio (L/s) of 3.0 and 4.5 in order to explain the effects of this important parameter. The computational simulations showed exceptionally strong internal consistency. Moreover, the ability of using a state–of–the–art computational methodology to sort the relative performance of different slot–jet film cooling configurations was clearly established.

NOMENCLATURE

DR	density ratio = ρ_j/ρ_∞
ES	slot–jet with exit shaping
h	heat transfer coefficient = $q''/(T_{aw}-T_w)$, (W/m^2K)
IS	slot–jet with inlet shaping
IES	slot–jet with inlet and exit shaping
L	length of slot–jet
L/s	slot–length–to–width ratio
M	blowing (or mass flux) ratio = $(\rho V)_j/(\rho V)_\infty$
q"	surface heat flux per unit area (W/m^2)
REF	reference slot–jet case
s	slot width
tke	turbulent kinetic energy (m^2/s^2)
T	local fluid temperature
TI	turbulence intensity (in percent) = $(2/3*tke)^{1/2}/V*100$
V	local fluid velocity
y^+	nondimensional distance away from wall
η	adiabatic effectiveness = $(T_\infty-T_{aw})/(T_\infty-T_j)$
ρ	fluid density

Subscripts

∞	mainstream conditions at crossflow inlet plane
j	conditions at coolant supply plenum inlet plane
w	conditions at wall
aw	adiabatic wall

1. INTRODUCTION

An understanding of jet–in–crossflow interaction is crucial in the design of hot section components in modern gas turbine engines. The temperature of the gases entering the turbine section is typically near the melting point of the alloys used in the turbine airfoils and endwalls. To prevent these components from failing at such elevated temperatures, they are commonly film cooled to isolate the metal from the hot gases. In addition, film cooling holes are often shaped in some manner to improve cooling performance, thus allowing for better metal protection and/or a decreased coolant supply; however, these configurations are often implemented with weak understanding of flow and heat transfer characteristics in and near the film hole. Although most film cooling is accomplished via discrete holes in the metal surface, slot–jets are used in gas turbine combustor liners, exhaust liners, and on the trailing edge of turbine blades. This study focuses on slot–jet film cooling physics and the effect of geometry on both flow and thermal field characteristics. Detailed field data, the adiabatic effectiveness, and the surface heat transfer coefficient are used to evaluate the advantages and/or disadvantages of slot shaping. Emphasis is placed on determining the dominant physical mechanisms responsible for the differences in film cooling performance of the various slot configurations.

Presented at the International Gas Turbine and Aeroengine Congress & Exhibition
Birmingham, UK June 10-13, 1996

Downloaded From: https://proceedings.asmedigitalcollection.asme.org on 06/30/2019 Terms of Use: http://www.asme.org/about-asme/terms-of-use

2. LITERATURE REVIEW

A number of studies are available in the open literature that examine jet–in–crossflow interactions both experimentally and computationally. Butkiewicz et al. (1995) provides a thorough overview of these studies and their ramifications. Although a large number of studies exist, only the ones closely related to 2–D inclined slot–jets studied in the present paper will be discussed here.

Several recent studies have focused on geometry effects on heat transfer downstream of discrete jets. Compound angle injection was studied by Ekkad et al. (1995a, 1995b), Ligrani et al. (1994), Sen et al. (1994) and Schmidt et al. (1994). Also, film hole shaping was reviewed by Sen et al. (1994) and Schmidt et al. (1994). Each of these studies focused on the difference between film cooling configurations in terms of the resulting downstream behavior; the physical mechanisms that cause these differences were not explained. To effectively extrapolate from the database provided in these papers, it is crucial to understand the flow mechanisms responsible for the documented effects.

Metzger et al. (1968) examined slot–jets with various injection angles ranging from 20° to 60°. This work studied the changes in the surface heat transfer for various injection angles, blowing ratios, temperature ratios, and L/s ratios. Realistic L/s ratios were used for some of the test conditions; however, the inlet geometry was atypical of gas turbines and therefore has limited applicability. Also, no thorough documentation of the dominant physical mechanisms was offered.

A more recent computational study by Irmisch (1995) examined a turbine blade airfoil with leading edge slots. Some notable highlights of this work were the use of an unstructured grid to accurately capture the complex airfoil shape and the use of a realistic film cooling geometry. However, grid independence and grid quality were not addressed thoroughly, although comparison between computed and experimental pressure coefficient was favorable. No investigation into the blade surface heat transfer characteristics was attempted.

Garg and Gaugler (1995) studied the effect of exit velocity and temperature distribution on the film cooling performance. A $1/7^{th}$ law and a parabolic velocity profile were assumed at the film hole exit to demonstrate this effect. They documented that the distribution of coolant velocity and temperature at the hole exit can cause a change in the heat transfer coefficient of as much as 50% to 60%. This evidence supports the choice of computational model used in this paper; namely, that the computational domain must include the plenum, slot, and crossflow to accurately model the complex flow physics.

In two companion papers by Butkiewicz et al. (1995) and Walters et al. (1995), a 2–D normal slot–jet was studied to develop and validate a consistently accurate computational methodology using experimental data of Scherer and Wittig (1991). In these studies, four key issues of obtaining consistently accurate computational results in the context of a jet–in–crossflow interaction were emphasized: (1) proper computational modelling of flow physics, (2) exact geometry representation and high grid quality, (3) use of higher–order discretization schemes, and (4) selection of appropriate turbulence models.

3. PRESENT CONTRIBUTIONS

The primary goals of this study are to implement an established computational methodology to:

- conduct careful comparison of results between a sharp–edged reference case (REF), and three distinct configurations with inlet shaping (IS), exit shaping, (ES), and combined inlet and exit shaping (IES).
- explain and document all of the crucial physical mechanisms which determine downstream heat transfer characteristics in inclined slot–jets, and determine the effect of geometry on these mechanisms
- provide complete results for both the adiabatic effectiveness and heat transfer coefficient downstream of the slot–jet for various slot geometries and operating parameters
- demonstrate that computational fluid dynamics (CFD) can be used to dependably capture complex flow physics so that the relative performance of various film cooling configurations can be accurately established.

4. PROBLEM DESCRIPTION

A 35° inclined slot–jet is studied in this paper because of its common use in gas turbines. To investigate geometry effects on film cooling performance, four distinct geometric configurations are presented: (1) slot with straight edges and sharp corners [REF]; (2) slot with shaped inlet region [IS]; (3) slot with shaped exit region [ES]; and (4) slot with both shaped inlet and exit regions [IES]. Figure 1 shows these different geometric arrangements. Note that the geometry of the slot is changed systematically so that their individual influences can be isolated. No optimization of the fillet radii in these geometries was performed; the specific dimensions were chosen to provide adequate shaping and metering length for the flow within the distance provided by the realistic slot L/s ratio. For each of the distinct geometries, the length–to–slot–width ratio was varied from L/s=4.5 to L/s=3.0 (realistic and applicable lengths to the gas turbine industry) to examine the effect of this important parameter. The slot width was fixed at 5 mm, and the length of the slot was varied to obtain the documented L/s ratios. Air was used as the working fluid in both the crossflow and coolant jet, with the temperature of the coolant jet adjusted to achieve the desired density ratio (DR).

5. COMPUTATIONAL METHODOLOGY

The computational methodology implemented in this study is documented in Butkiewicz et al. (1995) and Walters et al. (1995). Application of this methodology is outlined below.

5.1 Computational Model

Due to the strong coupling of the crossflow, slot, and plenum (Garg and Gaugler, 1995; Leylek and Zerkle, 1994), each of these three regions are modelled simultaneously in the computational domain. This allows boundary conditions to be applied where they are certain, and also allows the complex interactions within the jet itself and between the jet and crossflow at the exit plane to be computed rather than applied in this region. Figure 2 graphically depicts the computational model used in the present study. Velocity inlet boundary conditions are specified for both the crossflow and plenum inlets. The crossflow velocity and temperature are set at 10 m/s and 25.15°C, respectively. The density ratio is set to the desired value by decreasing the temperature of the coolant entering through the plenum. The coolant inlet velocity is then calculated so that the correct blowing ratio is attained. Turbulence quantities at the velocity inlets are determined using a TI of 0.7%, which matches planned experiments to complement the simulations presented in this paper. In order to decrease

Downloaded From: https://proceedings.asmedigitalcollection.asme.org on 01/14/2019 Terms of Use: http://www.asme.org/about-asme/terms-of-use

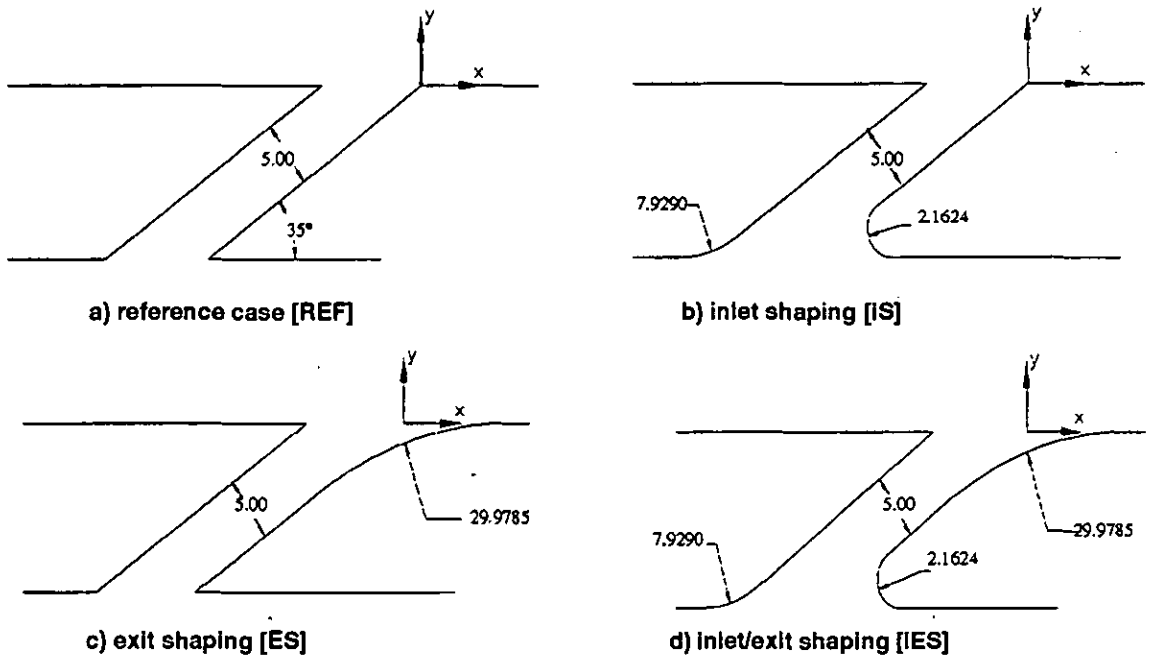

Figure 1. Four basic configurations were investigated: a) reference case [REF], b) inlet shaping [IS], c) exit shaping [ES] and d) inlet/exit shaping [IES]. All dimensions are in millimeters.

the size of the computational domain, a zero normal gradient condition is imposed at the top of the domain at 20 slot widths away from the test surface, and a flow outlet boundary condition is applied 30 slot widths downstream. The domain extends 40 slot widths upstream of the leading edge of the slot.

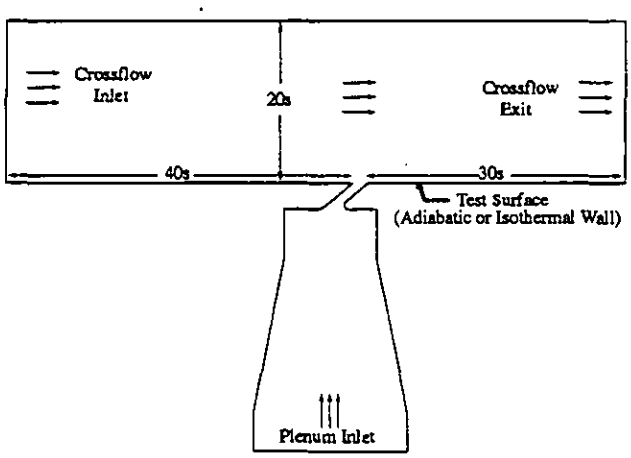

Figure 2. A sketch of the computational model shows the domain with boundary conditions. All thermal boundary conditions are adiabatic unless stated otherwise.

5.2 Geometry and Grid Generation

The I-DEAS solid modelling system, by SDRC Inc., was used to precisely capture the slot geometries and to fill the domain with the highest quality grid possible. Figure 3 shows a sample of one of these grids in the slot region. Grid quality was quantitatively evaluated by the cell skewness; a skewness of zero represents a perfect equilateral cell, and a skewness of unity denotes a degenerate cell. Each grid used in these simulations averaged a cell skewness of approximately 0.05, with 99.5% or more of the cells having a skewness under 0.2. Grid independence issues were addressed by performing test cases with coarse grids until grid independence was reached at approximately 30,000 cells. Grid y^+ along the upstream and downstream walls and inside of the slot was maintained between 20 and 30.

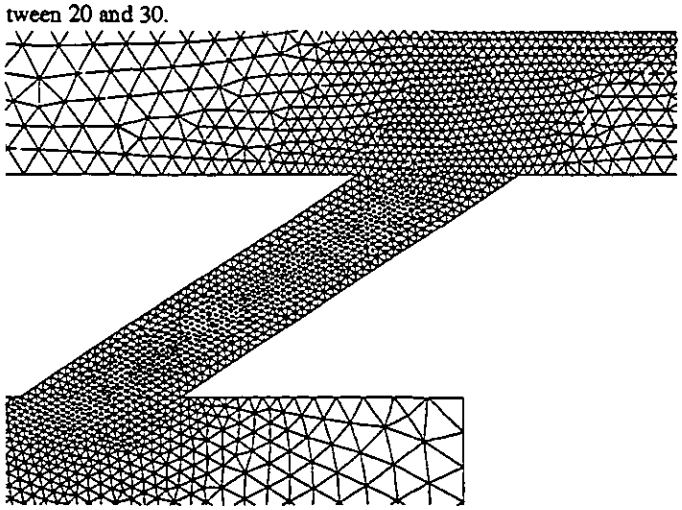

Figure 3. An enlarged view of the grid in the slot region demonstrates the quality and resolution of the unstructured/adaptive mesh.

5.3 Discretization Scheme

The second order discretization scheme implemented in RAMPANT, by Fluent Inc., was used to reduce numerical viscosity in the flowfield.

Downloaded From: https://proceedings.asmedigitalcollection.asme.org on 01/14/2019 Terms of Use: http://www.asme.org/about-asme/terms-of-use

This scheme is a 2nd order linear reconstructive scheme and has been shown to perform extremely well in the jet–in–crossflow class of problems by Walters et al. (1995).

5.4 Turbulence Modelling

Experimental studies by Andreopoulos and Rodi (1984) and Pietrzyk et al. (1989, 1990) examined the correlation between the mean velocity gradients and the turbulent shear stresses on the centerline plane in jet–in–crossflow interactions. These works verify that eddy–viscosity models are applicable to the class of problems involving 2–D slot–jets in the present study. In addition, a study by Chekhlov et al. (1994) compares direct numerical simulation (DNS) results to those obtained via two k–ε turbulence models. Their results show good agreement between the two eddy–viscosity models and DNS in computing the time averaged Reynolds stresses, thus providing further evidence that eddy viscosity models are adequate in 2–D situations. Based on these conclusions as well as in–house work, the standard k–ε model with generalized wall functions is selected for all the computational simulations documented in the present paper.

5.5 Convergence

A fully explicit, time–marching, unstructured/adaptive grid code was used to perform all processing of the computational simulations. Pre–processing and post–processing were performed on Sun workstations, while computations were performed on a 64 CPU Intel Paragon supercomputer. Simulations were typically run using 4 CPUs, which required approximately 6 hours per 1000 iterations. Convergence was accelerated using 4 multigrid levels, residual smoothing, a CFL number of 3.5 to 4.5, and local time stepping. The convergence of the simulations improved with M, and the total number of iterations to reach a fully converged state ranged from 3000 to 8000 iterations. In this study, convergence was established when the mass and energy imbalance in the entire computational domain was less than 0.1% and normalized residuals had fallen at least three orders of magnitude. The convergence and results of the simulations were insensitive to various initialization strategies.

6. RESULTS AND DISCUSSION

6.1 Validation of Computational Methodology

Much in–house work has been undertaken to validate the computational methodology documented in Butkiewicz et al. (1995) and Walters et al. (1995) for a wide variety of problems. Among these are a laminar flow over a cylinder problem (Newman, 1995), a normal slot–jet–in–crossflow interaction, and an inclined discrete jet–in–crossflow interaction. Each case documents excellent agreement with experimental results.

The first case examined a laminar flow over a cylinder for various Reynolds numbers. This challenging, benchmark test case was performed to verify the effectiveness of this methodology without the factor of turbulence modelling. Four key parameters were examined in this case: the distance between the vortex centers (b), the distance from the trailing edge of the cylinder to the vortex centers (a), the wake length (L), and the separation angle(θ_s), as shown in Figure 4. Predicted results for these parameters demonstrated excellent agreement with experimental measurements provided by Coutanceau and Bouard (1977), as shown in Table 1.

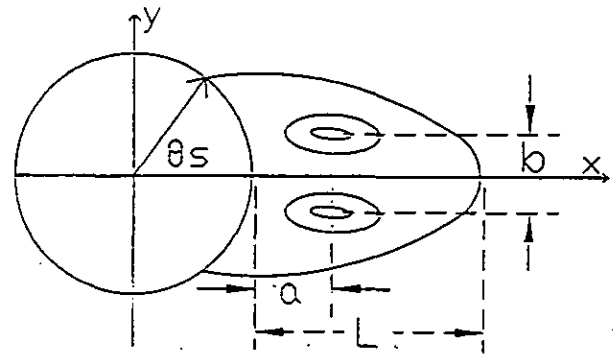

Figure 4. The key parameters of the vortex region shown above were investigated in the laminar flow over a cylinder study. These parameters are the wake length (L), the distance between the vortex centers (b), the distance from the trailing edge of the cylinder to the vortex centers (a), and the separation angle (Θ_s).

Table 1: Comparison of experimental and computational results for laminar flow over a cylinder case, $Re=U_\infty D/\nu=30$. Experimental data provided by Coutanceau and Bouard (1977).

Parameters	Experiment	Computation	% Difference
L (mm)	78.08	81.25	4.06
a (mm)	28.05	27.69	1.30
b (mm)	27.54	26.40	4.32
θ_s (degrees)	50.1	49.16	1.91

A normal slot–jet–in–crossflow problem was also examined, which is an extremely complex flow situation involving jet liftoff, separation, and reattachment. Reattachment length, the downstream pressure coefficient, and the downstream Nusselt number were investigated and compared to experimental results (Scherer and Witting, 1991). Figure 5 shows the agreement between computed and experimental results for the pressure coefficient. The reattachment length was overpredicted by 17%; however, note that extraneous blockage effects due to sidewall boundary layers and corner vortices documented in the experimental counterpart is expected to shorten the reattachment length. Since the computations were purely two dimensional and did not suffer from these blockage effects, an overprediction of experimental results is expected.

A 3–D discrete inclined jet–in–crossflow was studied by Walters and Leylek (1996) as additional verification of the computational methodology used in this paper. Computations of adiabatic effectiveness were compared to experiments by Sinha et al.(1990), and field data were compared to results from Pietrzyk et al.(1989). The computations slightly overpredicted η along the centerline as shown in Figure 6, but these simulations more effectively captured the spreading of the jet than any simulation found in the open literature. Differences between experimental and computational results were attributed to experimental discrepancies and turbulence modelling shortcomings in complex 3–D flows.

Some inclined slot–jet experimental results for the adiabatic effectiveness were available in–house and were compared to the simulations performed in this study. Experimental results are given for DR=1.55, L/s=2.79, and M=1.2. The predicted results were compared to experimental measurements for the same flow parameters and L/s=3.0 in Figure 7. Note that the computations slightly overpredict η; however, this behavior is expected due to the shorter L/s of the experimental study.

Downloaded From: https://proceedings.asmedigitalcollection.asme.org on 01/14/2019 Terms of Use: http://www.asme.org/about-asme/terms-of-use

The excellent agreement obtained between predicted and measured data for all of the cases described above gives confidence in the computational methodology and provides validation that the computations will closely predict the flowfield and surface heat transfer results in the series of simulations conducted in the present study.

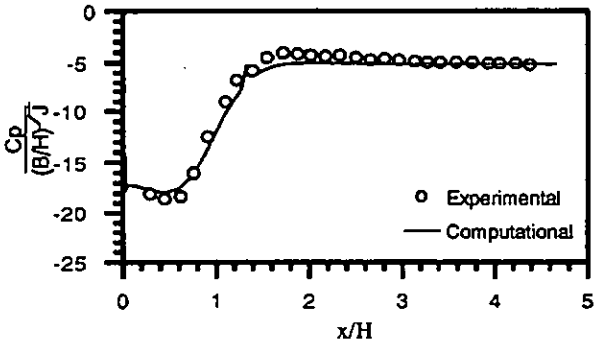

Figure 5. Plot of the normalized pressure coefficient (C_p) shows the excellent agreement between computed results and experimental measurements (Walters et al. 1995). H denotes the channel height of 95 mm, B is the slot width of 6 mm and J is the momentum flux ratio of 2.0.

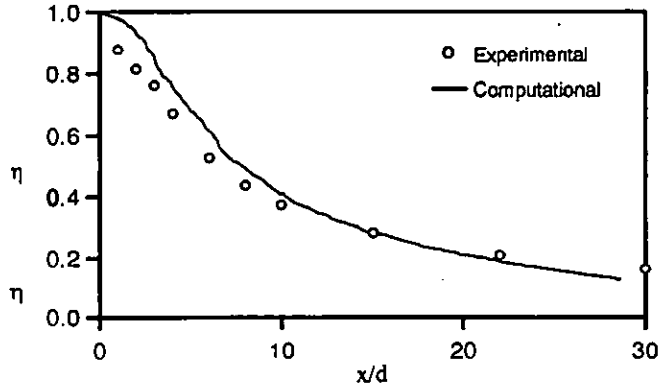

Figure 6. Plot of the computed centerline adiabatic effectiveness for the discrete inclined jet demonstrates good agreement with data provided by Sinha et al. (1990) for M=0.5.

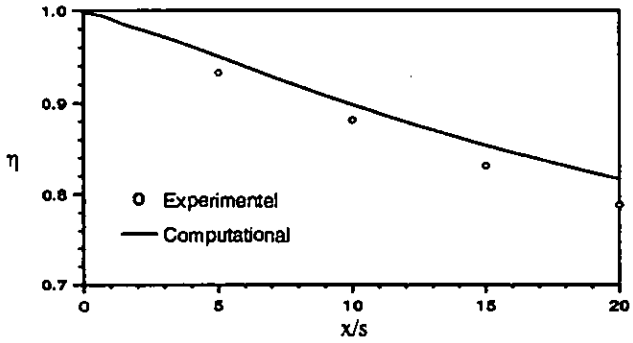

Figure 7. Plot of the adiabatic effectiveness for an inclined slot jet demonstrates the excellent agreement between computed results and experimental measurements for M=1.2, and DR=1.55 (Zelsberger, 1994).

6.2 Reference Case — 35° Inclined Slot-Jet

First, reference cases are established for L/s=3.0 and L/s=4.5 for use in subsequent comparison of geometry effects at blowing ratios ranging from M=1.0 to M=2.0. Note that a family of simulations were made for all geometries and all blowing parameters at both L/s ratios. The comparisons following in the next three sections are made using the L/s=4.5 reference case. Using this reference, the dominant features of the slot-jet-in-crossflow interaction are identified.

The flow features in the slot region which most significantly influence the downstream film cooling performance are highlighted in Figures 8, 9, and 10. The dominant features of the flowfield are: (1) the separation region at the slot inlet, (2) the jetting region along the upstream wall within the slot, and (3) the high pressure gradient/velocity gradient region at the trailing edge of the slot exit. Figure 8 shows the velocity vectors in the vicinity of the slot, indicating a separation and reattachment region along the downstream wall of the slot. This separation occurs due to the sharp corner which must be negotiated by the incoming fluid. As a consequence, the fluid along the upstream wall is accelerated in a "jetting" effect. The resulting shear layer within the slot itself is a significant source of turbulent kinetic energy, as seen in Figure 10. The turbulence generated in the slot is convected into the crossflow and downstream along the test surface, decreasing the film cooling performance. The other key source of turbulence production is at the trailing edge of the slot-jet exit plane. The turbulence generated at this location is augmented by a severe high gradient region, which is highlighted by pressure contours in Figure 9. This source of turbulence is particularly damaging to film-cooling performance due to its proximity to the test surface.

Each of the detrimental flow features discussed above can and will be avoided by rounding of the slot inlet and/or exit. In so doing, the film cooling performance, in terms of η and h, can be improved.

6.3 Inlet Shaping

As mentioned in section 6.2, two of the dominant flowfield features of the inclined slot-jet in crossflow interaction are the inlet separation region and jetting region along the upstream side of the slot. Because of the shaping of the inlet (as shown in Figure 1b), the flow is able to smoothly negotiate the turn into the slot; therefore, much less turbulence is generated at the entrance of the slot when compared to the reference case. Since the exit geometry is common with the reference case, a high gradient region is still present at the slot breakout which fuels turbulence that is injected into the film adjacent to the wall.

Shaping the inlet has a positive effect on both the adiabatic effectiveness and heat transfer coefficient. For each M, shaping the inlet consistently increased η and decreased h; however, these changes were not significant. At best, inlet shaping has the ability to increase η by up to 1 percentage point and decrease h by up to 10% (M=2.0). Plots of η and h for M=1.0 and M=2.0 are shown in Figures 11 and 12; note that since h exhibits asymptotic behavior far downstream, data are only shown for the near field, $0<x/s<10$. Moreover, as M decreases, the added performance benefit of inlet shaping also decreases, even becoming negligible at M=1.0. This gives preliminary indication that the separation region at low M does not significantly affect η and h.

As shown in Figure 13, the velocity profiles on the test surface downstream of the exit plane agree perfectly between the reference case and the inlet shaped case, except for the slight amount of upstream jetting that is still apparent in the near-field velocity profiles. However, this slight peak in velocity is quickly smoothed by the large amount of mixing in the film. The similarity of these profiles shows that any difference in heat transfer

Downloaded From: https://proceedings.asmedigitalcollection.asme.org on 01/14/2019 Terms of Use: http://www.asme.org/about-asme/terms-of-use

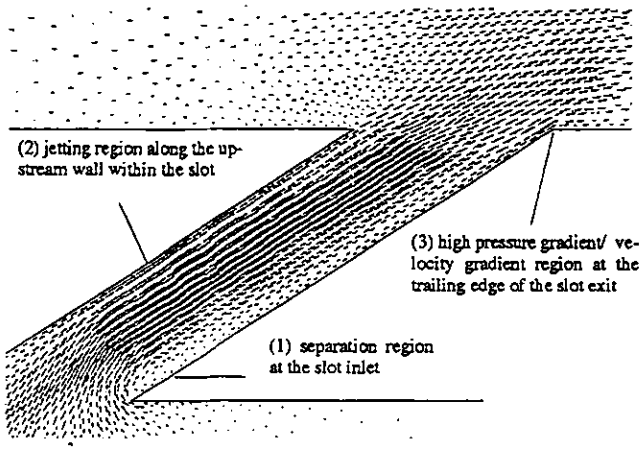

Figure 8. Velocity vectors (m/s) for M=2.0 and DR=1.5 provide an overview of the flowfield in and near the slot, highlighting the main flowfield features.

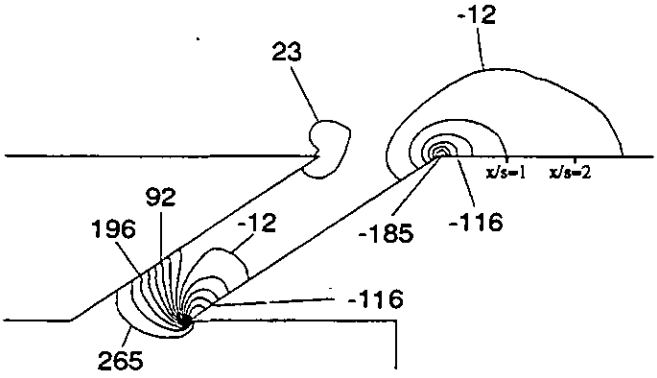

Figure 9. Pressure contours (Pa) for M=2.0 and DR=1.5 demonstrate the severe adverse pressure gradient at the trailing edge of the slot exit relative to 0 Pa at the exit plane.

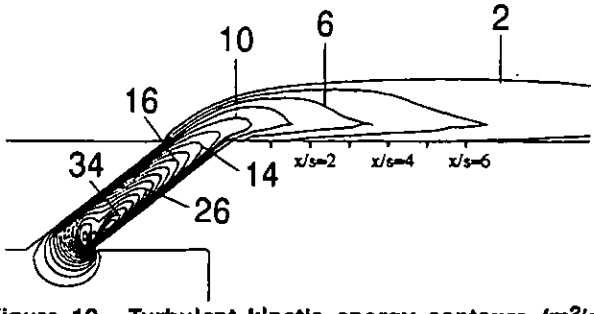

Figure 10. Turbulent kinetic energy contours (m^2/s^2) for M=2.0 and DR=1.5 indicate the crucial areas of turbulence generation within the slot for the reference case [REF].

characteristics is primarily due to the difference in turbulence content in the film, especially close to the downstream wall. Also, these similarities indicate the internal consistency of this set of computational simulations.

Profiles of tke, shown in Figure 14, also show the consistency of these simulations. The overall level of turbulence convected downstream is lower for the inlet-shaped case due to the decreased amount of turbulence generated within the slot. This decrease leads to a higher quality film with less turbulent mixing, and therefore better film cooling performance.

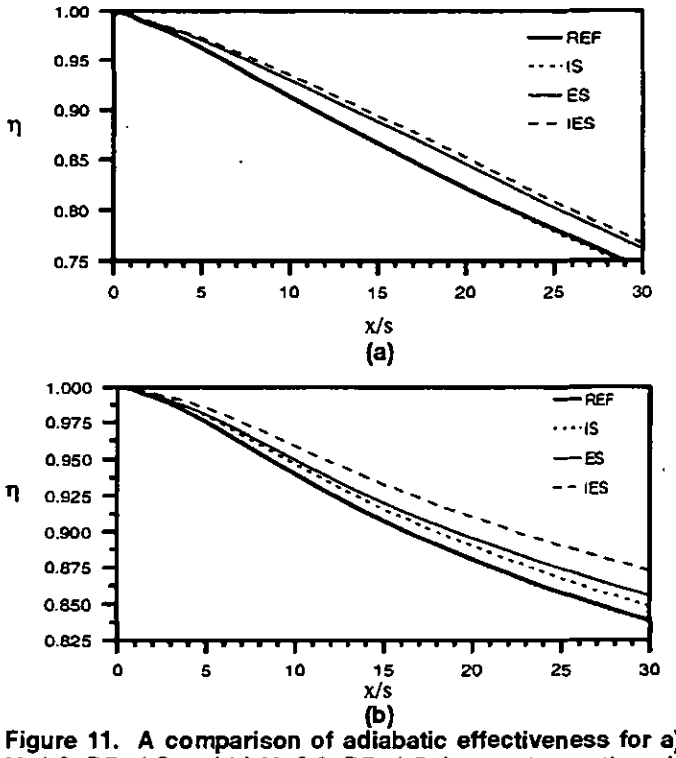

Figure 11. A comparison of adiabatic effectiveness for a) M=1.0, DR=1.5 and b) M=2.0, DR=1.5 demonstrates the advantages of slot shaping and the effect of M on each configuration.

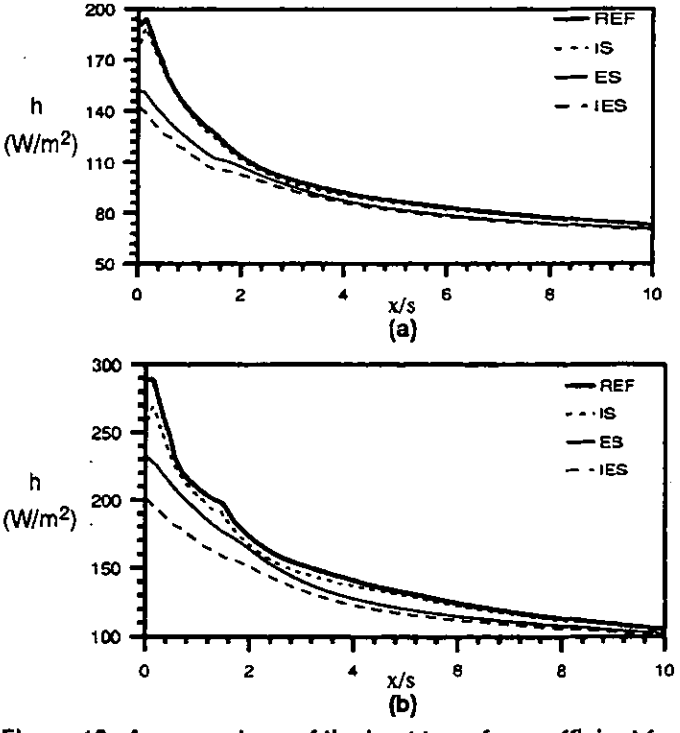

Figure 12. A comparison of the heat transfer coefficient for a) M=1.0, DR=1.5 and b) M=2.0, DR=1.5 illustrates the large benefit in the near field gained from slot shaping and the effect of blowing ratio for each configuration. Since the data collapses for x/s > 10, h is only shown for 0< x/s <10.

Downloaded From: https://proceedings.asmedigitalcollection.asme.org on 01/14/2019 Terms of Use: http://www.asme.org/about-asme/terms-of-use

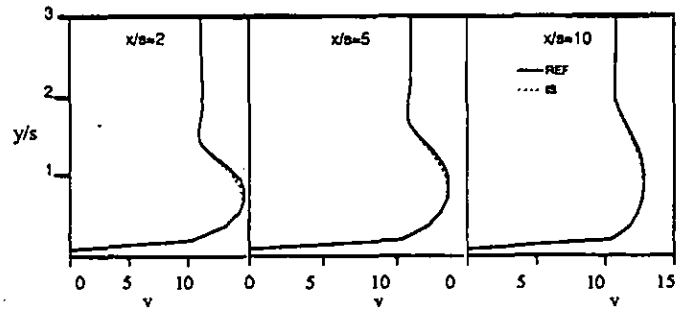

Figure 13. A comparison of REF vs. IS velocity profiles for M=2.0 and DR=1.5 at x/s=2, 5, and 10 show the internal consistency of the computational simulations.

Note that the maxima in the tke profiles are in the same near-wall y/s location, which corresponds to the generation of turbulence at the slot exit. It is important to note that as M decreases, the separation region becomes much smaller, which decreases both the amount of turbulence generation at the inlet and the magnitude of jetting along the upstream wall. This mechanism explains the behavior of the surface results as M decreases; eliminating an already insignificant separation region by shaping the slot inlet does not gain much benefit at low M.

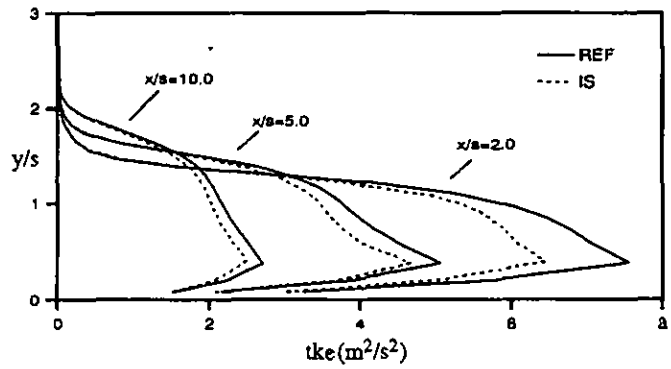

Figure 14. Turbulent kinetic energy profiles for M=2.0 and DR=1.5 at x/s=2, 5, and 10 demonstrate the benefit of inlet shaping in terms of a less turbulent/diffusive film.

Note that for the inlet shaped case, the high gradients near the downstream surface at the slot exit are slightly more severe than for the reference case. Velocity profiles inside of the slot show that the elimination of jetting actually has a negative effect on the film cooling performance of the inlet shaped case. Because of the jetting effect along the upstream wall, fluid velocity along the downstream wall is lower (due to continuity), whereas the inlet shaped case affords an approximate $1/7^{th}$ law profile inside of the slot as shown in Figure 15. This means that, if the inlet is shaped, higher velocity fluid must turn the sharp exit corner, which results in higher velocity gradients at the slot breakout. Because of this mechanism, the advantage gained by eliminating the turbulence generation at the slot inlet is counteracted strongly by the extra turbulence generated at the slot breakout. So, although one would expect to see a large advantage in η and h because of the decreased turbulence levels exiting the slot, the mechanism described above counteracts this possibility.

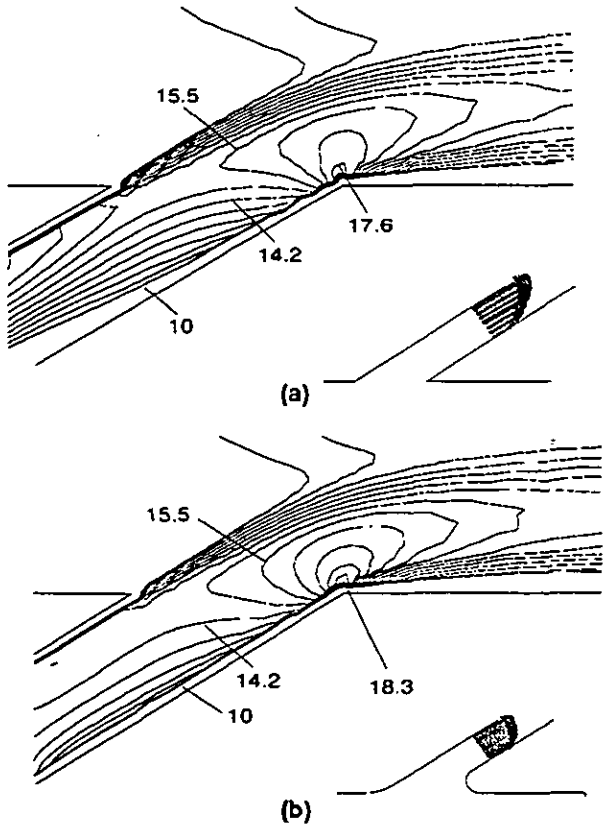

Figure 15. Velocity contours and velocity profiles for M=2.0 and DR=1.5 demonstrate the jetting effect inside the slot, a) reference case [REF] vs. b) inlet shaped case [IS]. Note the lower velocity region for the reference case along the downstream wall.

6.4 Exit Shaping

Although the separation region and jetting region at the slot inlet still exists, shaping of the slot exit (as shown in Figure 1c) alleviates the detrimental high gradient region at the trailing edge of the exit plane in the reference and inlet shaped cases. Removal of this particularly harmful turbulence source is expected to improve film cooling performance. Figure 16 demonstrates the structure of this turbulence generated at the slot exit in the reference and exit shaped cases.

For each M studied, shaping the slot exit consistently increases η and decreases h, both improving by an amount greater than that offered by inlet shaping (see Figures 11 and 12). Exit shaping alone afforded an η increase of up to 2 percentage points and an h decrease of 20%. It is important to note that unlike the varying amount of advantage given by inlet shaping, this additional benefit is approximately the same regardless of M.

The TI profiles at various streamwise locations on the test surface, shown in Figure 17, demonstrate the removal of turbulence generation at the slot exit. There is an extremely large difference in the turbulence intensity at the wall — at x/s=2, a 7% difference for M=2.0, and 4.5% at M=1.0. This large advantage makes its way downstream as a history effect. This point demonstrates the value of shaping the exit region, as well as the fact that the turbulence generated at the inlet region of the slot is quickly aue-

Downloaded From: https://proceedings.asmedigitalcollection.asme.org on 01/14/2019 Terms of Use: http://www.asme.org/about-asme/terms-of-use

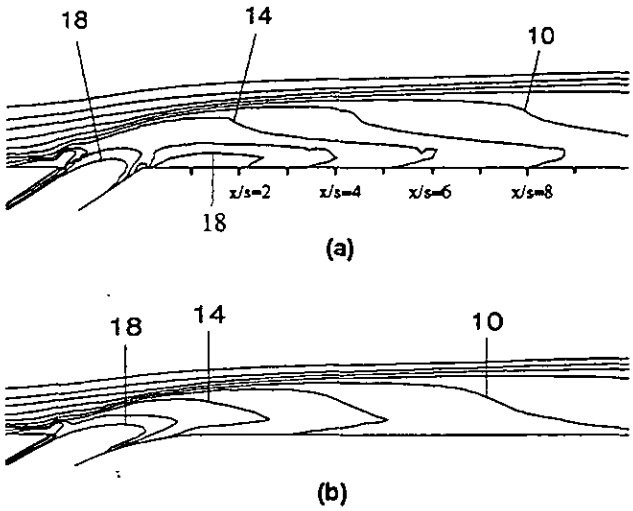

Figure 16. TI contours (%) for M=2.0 and DR=1.5 at the slot exit for a) the reference case [REF] and b) the exit–shaped case [ES] show that exit–generated turbulence can be effectively eliminated by exit shaping.

nuated because of the lack of a source as the fluid nears the slot exit plane. Far downstream, the TI profiles meet near the wall, although the overall level throughout the film is lower than the reference case. This explains why h is constant far downstream of the slot, but η continues to show a benefit because the decreased level of turbulence offers less diffusion of the hot crossflow across the film.

Competing mechanisms force the advantage gained in the film cooling performance to remain constant regardless of M. At high M, extremely high levels of turbulence are generated at the slot inlet due to the separation region, but the need for exit shaping is not as great due to the upstream skewed velocity profile of the jetting fluid. On the other hand, not as much turbulence is generated at the inlet at low M, but the small size of the separation region forces a nearly uniform velocity profile in the slot which generates a larger amount of turbulence near the test surface at the slot breakout. This combination of the jetting effect and the turbulence generation at the inlet allow shaping of the slot exit to offer a nearly constant advantage in the film cooling performance which is not a function of the range of M studied in this paper.

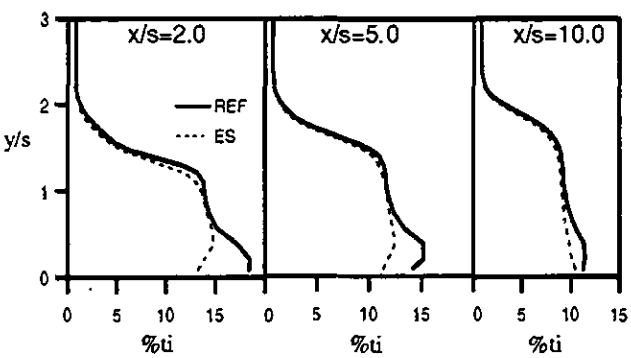

Figure 17. Turbulence intensity profiles for M=2.0 and DR=1.5 at x/s=2, 5, and 10 (REF vs. ES) show the elimination of turbulence generated at the downstream slot exit by exit shaping.

For each M (for L/s=4.5), shaping of the slot exit has a greater impact on film cooling performance than shaping of the inlet. This result is consistent for each type of surface data examined (η and h). This greater effect is gained by the elimination of a particularly detrimental pocket of turbulence generation at the slot exit. As stated previously, the increase in film cooling performance over the reference case is constant regardless of the blowing ratio.

6.5 Combining the Effects of Inlet and Exit Shaping

Obviously, better film cooling performance should be attained by combining the benefits of inlet and exit shaping (Figure 1d). Based on the effects of geometry variations isolated in the previous two sections, each of the detrimental flow features discussed in Section 6.2 can be eliminated by the shaping of both the inlet and the exit of the slot–jet. As a consequence, the competing flow mechanisms discussed in the previous section are eliminated so that shaping the exit can increase the advantage in performance as M increases, rather than simply offering a constant advantage in film cooling performance regardless of the blowing ratio.

For each M studied, shaping both slot exit and inlet consistently increases η and decreases h to a greater magnitude than offered by either inlet or exit shaping alone. This configuration improves η by over 3 percentage points, and decreases h by over 30% compared to the reference geometry.

As shown by Figures 11 and 12, the trends in η and h can be interpreted as superposition of the separate results of the inlet shaped and exit shaped cases. Even so, this superposition does not account for all of the increased film cooling performance given by shaping the inlet and exit of the slot. As discussed in the previous section, extra film cooling performance is gained due to the elimination of competing flow mechanisms apparent in the exit–shaped case. For each M and L/s studied, shaping of both inlet and exit provides the best benefit in terms of film cooling performance.

6.6 Effects of Slot Length–to–Width Ratio (L/s)

Overall, film cooling performance is much poorer as L/s is decreased. Figure 18 demonstrates the decrease in film cooling performance when the slot length is decreased from L/s=4.5 to L/s=3.0. Turbulence generated at the inlet is not given a chance to attenuate, so a more diffusive film is ejected from the slot. The same trends in the film cooling performance as a function of slot geometry are observed for these short L/s cases, for the same reasons as discussed above for the longer L/s. As the L/s is decreased, the need for inlet shaping increases accordingly; this characteristic is reflected in η and h. Indeed, for the L/s=3.0 cases, the benefit derived from shaping the inlet becomes greater when compared to the L/s=4.5 cases, but the benefit given by shaping the exit remains constant.

6.7 Effects of Density Ratio

To isolate the effect of DR on the film cooling performance, the density ratio was varied from DR=1.5 to DR=2.0 using the reference geometry and a blowing ratio of M=2.0. Results show (Figure 18) that as DR increases, film cooling performance also increases. The simulations performed here are found to be fully consistent with the trends documented in the open literature regarding DR; therefore, no further explanation of these results will be offered. Note, however, that the dominant flow features identified in Section 6.2 do not change with DR.

Downloaded From: https://proceedings.asmedigitalcollection.asme.org on 01/14/2019 Terms of Use: http://www.asme.org/about-asme/terms-of-use

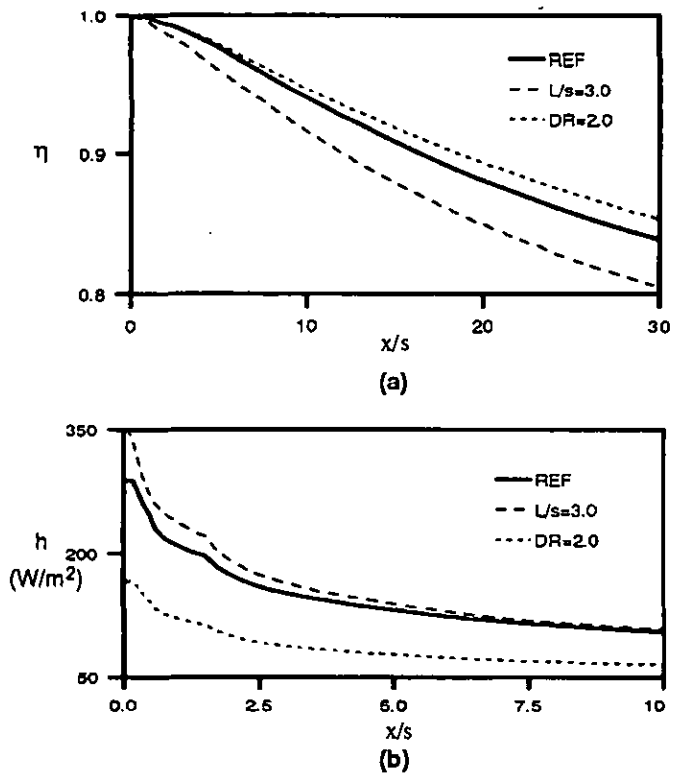

Figure 18. A comparison of the effects of DR and L/s on a) η and b) h relative to the reference case DR=1.5, and L/s=4.5.

6.8 Review of Computational Simulations

Overall, surface results and flowfield details are exceptionally consistent between *all* computational simulations performed. Even the minute details (location of peaks in tke, velocity, velocity profiles, etc.) are in perfect agreement between simulations. When CFD is used properly, it is clear that trends can be accurately captured, which is often the gas turbine heat transfer designer's primary concern. Also, CFD gives access to all information in a flowfield so that complete understanding of the crucial flow mechanisms may be obtained. For example, this set of computational simulations contain evidence that shaping of the slot has a dramatic effect on the discharge coefficient. All of these conclusions support that CFD may be successfully and practically applied as a design tool in modern gas turbine design.

7. CONCLUSIONS

- Shaping of the slot-jet inlet dramatically decreases the amount of turbulence generated at the slot inlet; however, the expected gain in film cooling performance is lost due to the turbulence generation at the trailing edge of the slot breakout.
- Shaping of the slot exit consistently increases film cooling performance by eliminating turbulence generation at the slot breakout, which would otherwise immediately contaminate the film.
- As the blowing ratio(M) decreases, the effect of shaping the slot inlet declines rapidly, becoming negligible at low M. However, shaping of the slot exit significantly improves film cooling performance at any M, for the range of M investigated in the present study.
- Combining inlet and exit shaping superimposes the advantages displayed by both, and results in the best film cooling performance of the test cases for any blowing ratio. However, shaping inlet and exit does not provide significant advantage over shaping the exit only for low blowing ratios.
- To accurately estimate film cooling performance, information on both adiabatic effectiveness and the heat transfer coefficient must be obtained.
- The ability of CFD to accurately and dependably capture the flow physics and correct trends in 2-D slot-jet film cooling has been clearly established. The CFD model of 2-D slot-jet film cooling presented in this paper may be used as an effective preliminary design tool to screen alternative configurations.

ACKNOWLEDGMENTS

This paper was prepared with the support of the U.S. Department of Energy, Morgantown Energy Technology Center, Cooperative Agreement No. DE-FC21-92MC29061. The authors would like to thank Mr. Dewitt Latimer, Mr. Gary Berger, and Mr. Richard Baldwin of the Engineering Computer Operations at Clemson University for their assistance in all computer related matters. Also, Dr. Pat Fay provided first-rate support for the Intel Paragon supercomputer used for the crunching of the many simulations. We are also deeply indebted to Dr. Rick Lounsbury at Fluent, Inc. for his invaluable support with RAMPANT. Lastly, special thanks to Mr. Robert Brittingham, who provided assistance with the simulations, and Mr. Andreas Zeisberger, who provided valuable experimental data.

REFERENCES

Andreopoulos, J., 1984, "Measurements in a Jet-Pipe Flow Issuing Perpendicularly Into a Cross Stream," Journal of Fluids Engineering, Vol. 104, pp. 493-499.

Butkiewicz, J., Walters, D., McGovern, K., and Leylek, J., 1995, "A Systematic Computational Methodology Applied to a Jet-in-Crossflow Part 1: Structured Grid Approach," Presented at the ASME Winter Annual Meeting, San Francisco, CA.

Chekhlov, A., Orszag, S.A., Sukoriansky, S., Galperin, B., and Staroselsky, L., 1994, "Direct Numerical Simulation Tests of Eddy Viscosity in Two Dimensions," Phys. Fluids, Vol. 6, No. 7, pp. 2548-2550.

Coutanceau, M., and Bouard, R., 1977, "Experimental Determination of the Main Features of the Viscous Flow in the Wake of a Circular Cylinder in Uniform Translation, Part 1: Steady Flow," Journal of Fluid Mechanics, Vol. 79, part 2, pp. 231-256.

Ekkad, S., Zapata, D., and Han, J., 1995, "Film Effectiveness Over a Flat Surface with Air and CO2 Injection through Compound Angle Holes Using a Transient Liquid Crystal Image Method," ASME Paper No. 95-GT-11.

Ekkad, S., Zapata, D., and Han, J., 1995, "Heat Transfer Coefficients Over a Flat Surface with Air and CO2 Injection through Compound Angle

Downloaded From: https://proceedings.asmedigitalcollection.asme.org on 01/14/2019 Terms of Use: http://www.asme.org/about-asme/terms-of-use

Holes Using a Transient Liquid Crystal Image Method," ASME Paper No. 95–GT–10.

Garg, V., and Gaugler, R., 1995, "Effect of Velocity and Temperature Distribution at the Hole Exit on Film Cooling of Turbine Blades," Presented at the International Gas Turbine and Aeroengine Congress and Exposition, Houston, TX.

Irmisch, S., 1995, "Simulation of Film–Cooling Aerodynamics with a 2D Navier–Stokes Solver Using Unstructured Meshes," Presented at the International Gas Turbine and Aeroengine Congress and Exposition, Houston, TX.

Launder, B.E. and Spalding, D.B., 1974, "The Numerical Computation of Turbulent Flows," Computer Methods in Applied Mechanics and Engineering, Vol. 3, pp. 269–289.

Leylek, J., and Zerkle, R., 1994, "Discrete–Jet Film Cooling: A Comparison of Computational Results with Experiments," ASME Journal of Turbomachinery, Vol.113, No. 3, pp.358–368.

Ligrani, P., Wigle, J., Ciriello, S., and Jackson, S., 1994, "Film Cooling from Holes with Compound Angle Orientations, Part I: Results Downstream of Two Staggered Rows of Holes with 3D Spanwise Spacing," ASME Journal of Heat Transfer, Vol. 116, pp. 341–352.

Metzger D., Carper, H., and Swank, L., 1968, "Heat Transfer With Film Cooling Near Nontangential Slots," Journal of Engineering for Power, Vol. , pp. 157–163.

Newman, O., 1995, "The Development of an Effective Computational Methodology for Complex Flows," Senior Honors Thesis, Dept. of Mechanical Engineering, Clemson University, Clemson, SC.

Pietrzyk, J., Bogard, D., and Crawford, M., 1989, "Hydrodynamic Measurements of Jets in Crossflow for Gas Turbine Film Cooling Applications,"ASME Paper No. 88–GT–194.

Pietrzyk, J.R., Bogard, D.G., and Crawford, M.E., 1990, "Effects of Density Ratio on the Hydrodynamics of Film Cooling," ASME Paper No. 89–GT–175.

RAMPANT Users Guide, July 1994, Release 3.1, Fluent Incorporated, Lebanon, NH.

Scherer, V. and Wittig, S., 1991, "The Influence of the Recirculation Region: A Comparison of the Convective Heat Transfer Downstream of a Backward–Facing Step and Behind a Jet in a Crossflow," ASME Journal of Turbomachinery, Vol. 113, pp. 126–134.

Schmidt, D., Sen, B., and Bogard, D., 1994, "Film Cooling with Compound Angle Holes: Adiabatic Effectiveness," ASME Paper No. 94–GT–312.

Sinha, A.K., Bogard, D.G., and Crawford, M.E., 1990, "Film Cooling Effectiveness Downstream of a Single Row of Holes with Variable Density Ratio," ASME Paper No. 90–GT–43.

Sen, B., Schmidt, D., and Bogard, D., 1994, "Film Cooling with Compound Angle Holes: Heat Transfer," ASME Paper No. 94–GT–311.

Walters, D., McGovern, K., Butkiewicz, J., and Leylek, J., 1995, "A Systematic Computational Methodology Applied to a Jet–in–Crossflow Part 2: Unstructured/Adaptive Grid Approach," Presented at the ASME Winter Annual Meeting, San Francisco, CA.

Walters, D., and Leylek, J., "A Consistently Accurate Computational Methodology Applied to a Three Dimensional Film Cooling Flowfield," Abstract accepted to the ASME/IGTI '96 Turbo Expo, Birmingham, England, June 1996.

Yakhot, V., Orszag, S.A., Thangam, S., Gatski, T.B., and Speziale, C.G., 1992, "Development of Turbulence Models for Shear Flows by a Double Expansion Technique," Physics of Fluids Part A, Vol. 4, pp. 1510–1520.

Zeisberger, Andreas, 1994, "Experimental Investigation of Film Cooling Effectiveness with Slot Injection on a Flat Plate," Clemson University M.S. Thesis.

Downloaded From: https://proceedings.asmedigitalcollection.asme.org on 01/14/2019 Terms of Use: http://www.asme.org/about-asme/terms-of-use